Low Voltage Products

Arc flash hazard mitigation

Each year more than 2,000 people are treated in burn centers with severe arc flash injuries.

ABB designs and manufactures products and solutions to provide the highest achievable safety standards, thereby reducing Arc Flash Hazard, which is something not only possible, but also extremely easy thanks to the ABB technology.

Arc Flash Hazard: what, where and why

According to the OSHA 29 CF 1910 Subpart S, 1910.333 (a): "..Live parts to which an employee may be exposed shall be de-energized before the employee works on or near them, unless the employer can demonstrate that de-energizing introduces additional or increased hazards or is infeasible due to equipment design or operational limitations..."

If all the circuits are de-energized, no arc-flash danger is present for a worker making maintenance or test activities inside the switchboard.

There could be 3 main situations that could result from an energized condition:

A) Arc Flash Tested Assembly case.
No energized live source on the operating area with arc proof mechanical barriers separating the operator from the on live energized sources or conductors

B) Standard assembly and no living parts case.
No energized live sources on the area where the skilled and instructed personnel have to operate when the intermediate mechanical barriers (e.g. doors) aren't arc proof

C) Standard assembly and living parts case.
Energized live sources on the area where the skilled and instructed personnel have to operate (obviously no on live circuits); the employee works on or in the proximity of exposed energized (energized and not enclosed, shielded, covered, or otherwise protected from contact) components

A) Arc Flash Tested Assembly

The mechanical envelope and the barriers have to withstand the pressure and thermal stresses related to an arc: no relevant damage has to be caused on the items on the adjacent area, where skilled and instructed personnel could operate.

In general, personnel protection could be achieved if the mechanical structure and the protection coordination strategy are designed and tested to fulfill the requirements of the standards IEEE C37.20.7 or of the equivalent IEC TR 61641 (for low voltage applications).

Switchboard under test according to IEC/TR 61641

In general, taking into account the density of the indicators used during the test (150g/m2=4.42 oz/yd2) and the requirements of the NFPA 70E table for a 600V AC switchgear, it is possible to achieve the hazard risk category 0 (no flame retardant PPE required).

The ABB Emax PCBs installed inside switchboards and cubicles have already been tested several times with positive results according to the requirements set by the guidelines. If correctly installed and coordinated, their structure and performances are compliant with the requirements.

The same is true for the Tmax MCCBs that were tested inside wind converters with positive results, with a prospective short circuit current of 50kA@690V.

B) Standard assembly and no living parts case

There could be 2 operating conditions:

b.1) normal conditions (panel covers & designed protection in place, doors closed, equipment plugged in, no faulty equipment, ...).

b.2) abnormal conditions (panel covers /protections removed, doors open, equipment temporarily/partially wired or extracted, damaged or faulty equipment, maintenance tools put in,...).

Case b.1)

Under normal conditions, personnel protection could be granted if the requirements of the product (like UL 508, UL 67,....) and of the installation standards (like NFPA 70) and all the manufacturer installation instructions are fulfilled.

The Emax and the Tmax CBs are verified and tested according to the UL 1066 and UL 489 respectively, fulfilling all the safety requirements.

The tests are done inside a conductive envelope to verify that there isn't an arc re-ignition after the current breaking; the dimension of these envelopes are reported inside the documentation and on the installation instructions.

These dimensions are very compact due the high reduction of the energy of vented ionized gasses made inside the Emax and Tmax arc chute.

ABB Emax testing enclosures (ref. ANSI requirements)

The respect of the stated insulation distances is one of the conditions to avoid an internal parallel arc fault with arc flash inside the switchboard.

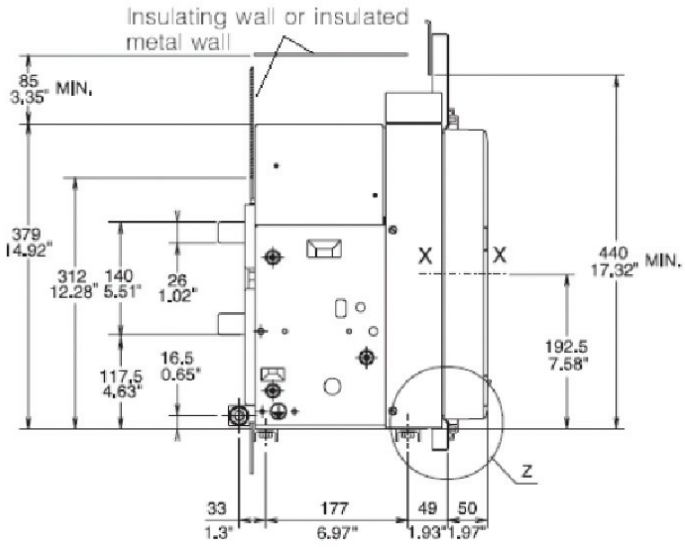

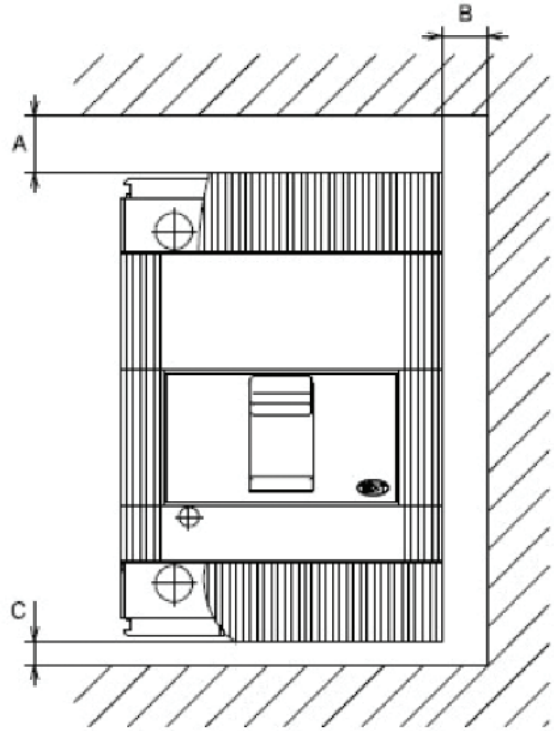

The NFPA 70E -2009 standard, on the table 130.7 (C) (9), that lists some typical electrical tasks and recommends the PPE category that have to be worn, and also states that for CB operations with doors closed the Hazard/Risk category is 0.

Case b.2)

If we take into consideration a typical example of abnormal conditions, i. e. the rack out of a draw-out breaker behind a close door, it is very difficult to define the arc-flash boundary (because the calculation formula is defined if there isn't an intermediate mean) and about hazard/risk category we can read on the NFPA 70E-2009, 130.7 (C) (9) FPN 2 that:

> " ...The collective experience of the task group is that in most cases closed doors do not provide enough protection to eliminate the need for PPE for instances where the state of the equipment is known to readily change (e.g., doors open or closed, rack in or rack out)...".

The closed door effect cannot be easily analyzed (there could be different doors fixing elements configurations and their status could change during the equipment life) and hence the calculation has to be made giving as reference distance for the incident energy calculation, the distance based on the protection cover position.

In order to achieve a significant mitigation of arc flash hazard, ABB offers on the Emax and Tmax circuit breakers numerous features, such as:

- The remote control of the CB operation and of the ranking (with an accessory for the motorized insertion/extraction of the withdrawable mobile part on the fixed one) to keep workers at a safe distance from the equipment

- The safe lock on open position during the ranking operations to avoid any possible status transition

- The safe shutter padlock device and the plastic poles structure design

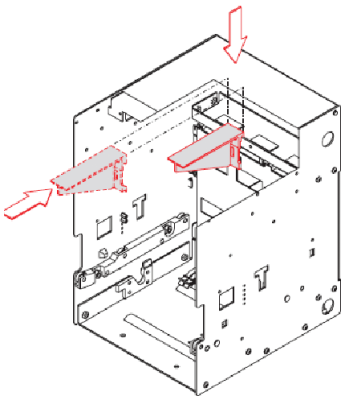

- The interlock systems

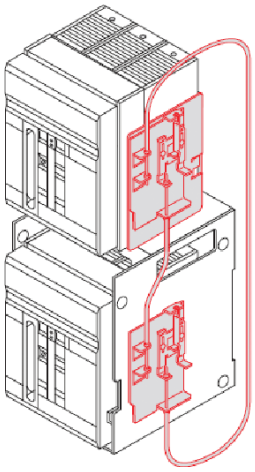

- The short circuit current energy and peak limitation

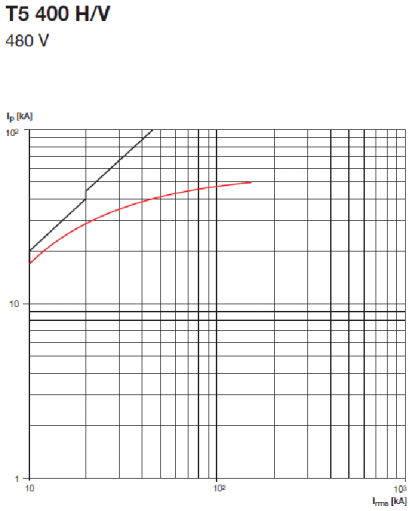

- The advanced performances of ABB trip units that guarantee fast tripping and an adaptive behavior

For the molded case circuit breakers, the limitation of the short circuit let through energy and of the short circuit current peak play the most important role. For example, the ABB Tmax T5V 400A CBs for a bolted 3ph fault with a prospective short circuit current of 150kA@480V, is able to limit the incident energy on the protected zone at values lower than 0.08 cal/sq cm.

For the Power Circuit Breakers (PCBs), like the ABB Emax series, the reduction of the tripping time is the main active element to cut the incident energy (proportional to the arcing time) and to lower the hazard/risk category.

Using the ABB Emax PCBs with the high performance trip units, three different strategies could be selected to achieve the target of the arc flash risk category reduction:

- **Zone selectivity (on the PR122, PR123, PR332, PR333 releases)**

  This coordination type allows setting of a fast trip time only for the circuit breaker immediately upstream of the fault, thus it is possible to achieve a high selective coordination while keeping a fast trip.

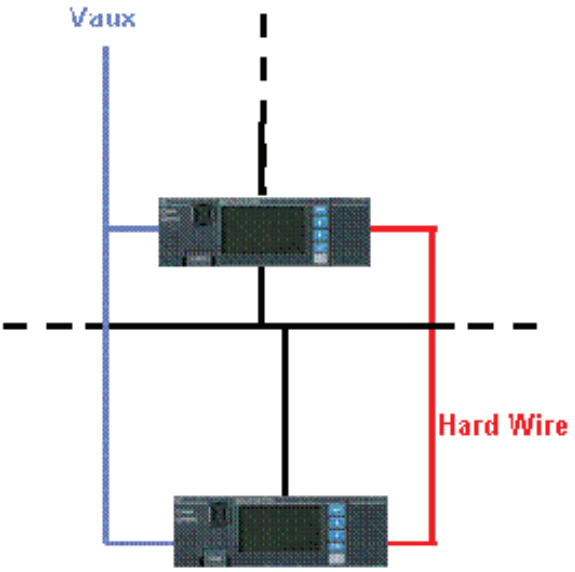

- **Dual settings (on the PR123, PR333 releases)**

  This function allows two different parameters to be set. Under normal conditions, the settings allow standard selectivity, trip thresholds and times (defined also to avoid unwanted tripping during the transitory phases and in presence of inrush currents). During maintenance, a signal (e.g. via a door switch while opening the cabinet door or the installation room door) is sent to the trip unit so that it switches to the 'fast' setting and operates more safely.

set A

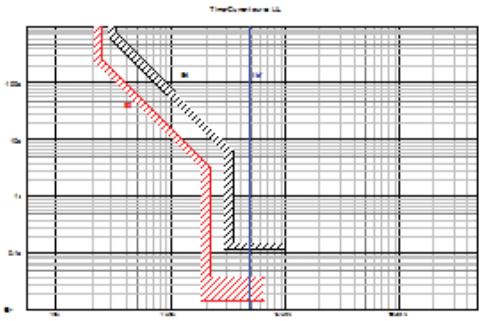

E4H 3200 PR122/P -LSI In=3200A 4p

L: I1: 0.85 t1: 102s

S: t=const. I2: 10.00 t2: 0.14s

I: - off

set B

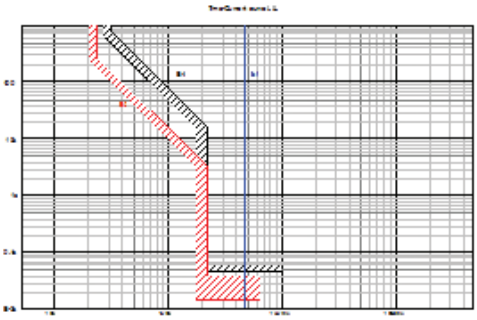

E4H 3200 PR122/P -LSI In=3200A 4p

L: I1: 0.85 t1: 102s

S: t=const. I2: 6.3 t2: 0.05s

I: - off

In the example above, by using the PR122 dual setting functionality, the arc flash hazard is reduced from category 3 to category 1.

• **External arc detectors fast link (on the PR122, PR123 releases + PR120/K add-on module)**

Bright arc detection systems (able to react in very few ms) could be electrically connected to a fast input port of the releases; in case of arc, the external signal bypasses the protection functions (delayed to permit coordination and to avoid unwanted tripping) and the PCB starts opening in a few milliseconds.

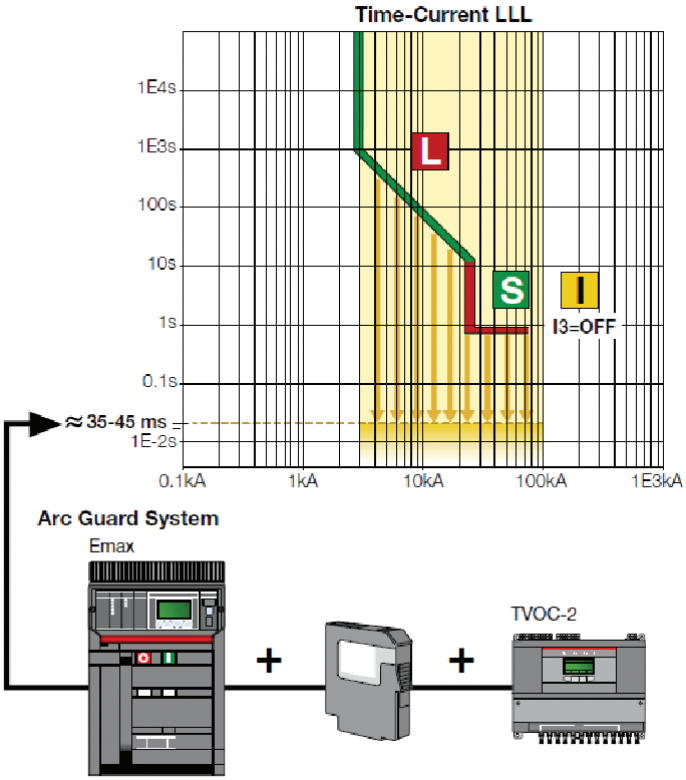

In the example above, coordination of EMAX PCB, accessorized with PR120/K module, with TVOC-2 arc detection system. According to ABB tests, tripping time is reduced to 35-45 ms, the fastest in the low voltage world.

C) Standard assembly and living parts case.

In this case, the Personal Protection Equipment (PPE) has to protect the worker without any help from the mechanical structure.

There could be 2 operating options:

c.1) the only energized live conductors are supplied by external sources. The internal circuits are de-energized through a disconnector and the employee is working on no energized circuits

c.2) some internal circuits are energized

Case c.1)

If c.1, the hazard risk category (and the arc flash PPE category) has to be defined according to the characteristics of the live circuits supplied by external sources.

This is the typical case on a converter during the maintenance operations when the main circuit disconnector (or CB) is open but the incoming circuits could be supplied by an external source (transformer or photovoltaic panels).

In this case the limitation characteristics of the external supply source interconnection device are very important to reduce the incident energy in case of arc-flash.

The ABB Emax and Tmax CBs with their limitation characteristics, their adaptive fast tripping releases and the insulation level between phases and on open conditions could reduce the real risk level, the PPE category and the Arc Flash Boundary dimensions (please see the above sections for a more detailed explanation.

Case c.2)

In this case, also the devices inside the working area are involved in the analysis.

In general when there is a need to operate in this way in a switchboard, the aux circuits only are energized and the main circuit protection devices are open or extracted.

The ABB protection devices, correctly installed and maintained are able to switch off the fault current in a very fast way, thereby reducing the risk level, without any parallel arc re-ignition, as discussed in the above part of the document.

Contact us

ABB Inc.
Low Voltage Control Products
16250 W. Glendale Drive
New Berlin, WI 53151
Phone: 888-385-1221
Fax: 800-726-1441

USA Technical Support & Customer Service:
888-385-1221, Option 4
7:30AM to 5:30PM, CST,
Monday - Friday
lvps.support@us.abb.com

Web: www.abb.us/lowvoltage

1SXU210018L0201, July 2012

Power and productivity
for a better world™